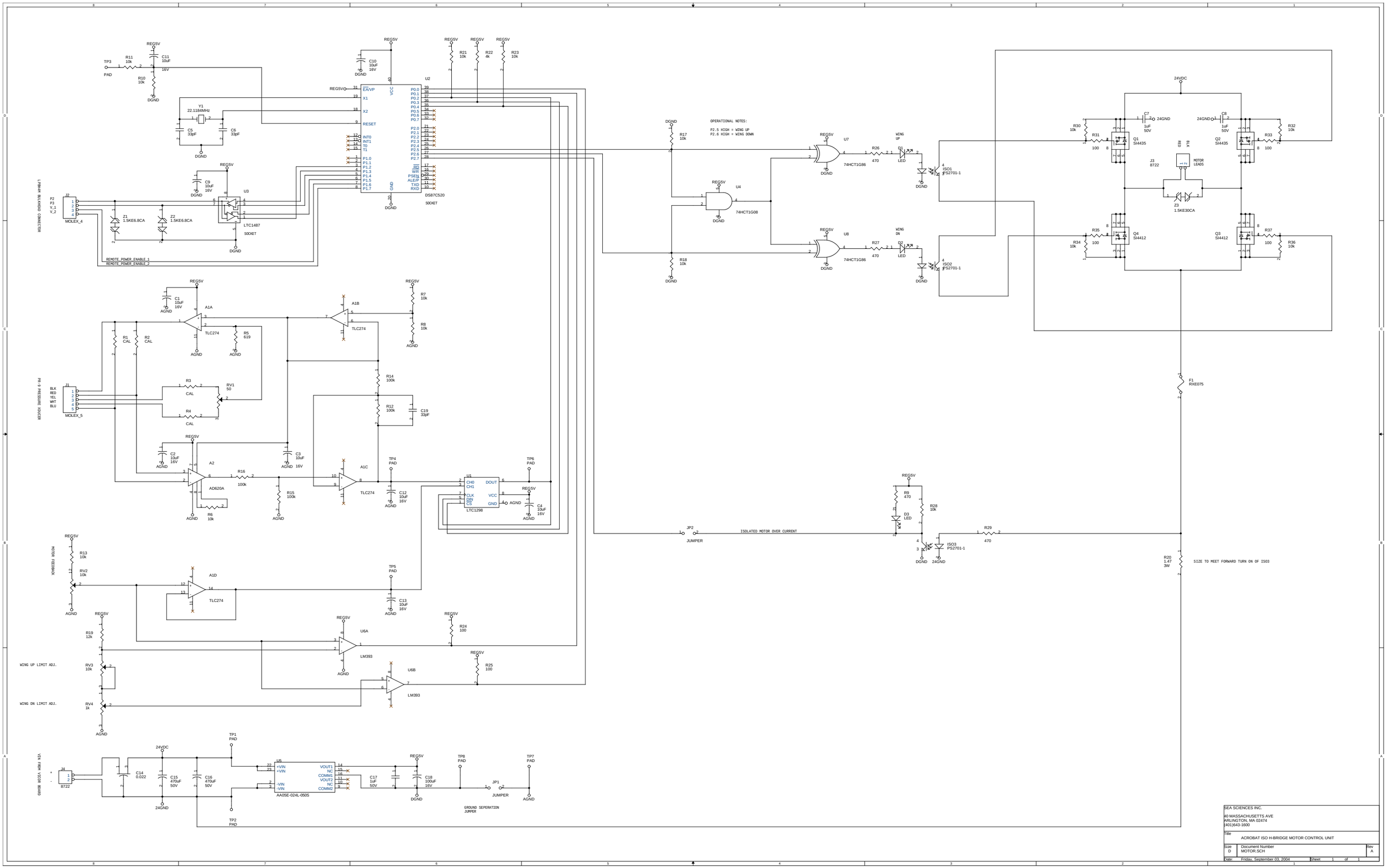
OPERATIONAL NOTES:
P2.5 HIGH = WING UP
P2.6 HIGH = WING DOWN
U2
DS87C520
SOCKET
U3
LTC1487
SOCKET
J2
MOLEX_4
LOPHAM BLKHAD/O CONNECTOR
REMOTE_POWER_ENABLE_1
REMOTE_POWER_ENABLE_2
J1
MOLEX_5
RS232 INTERFACE
U7
U8
74HCT1G86
U4
74HCT1G08
WING UP
WING DN
ISO1
ISO2
ISO3
PS2701-1
Q1 Si4435
Q2 Si4435
Q3 Si4412
Q4 Si4412
J3
8722
MOTOR LEADS
24VDC
24GND
F1
RXE075
U1
LTC1298
U5
AA05E-024L-050S
J4
8722
VIN FROM VICOR BOARD
JP2
JUMPER
ISOLATED MOTOR OVER CURRENT
R20
1.47
3W
SIZE TO MEET FORWARD TURN ON OF ISO3
MOTOR FEEDBACK
WING UP LIMIT ADJ.
WING DN LIMIT ADJ.
JP1
JUMPER
GROUND SEPERATION JUMPER
SEA SCIENCES INC.
40 MASSACHUSETTS AVE
ARLINGTON, MA 02474
(401)643-1600
Title
ACROBAT ISO H-BRIDGE MOTOR CONTROL UNIT
Size D
Document Number MOTOR.SCH
Rev A
Date: Friday, September 03, 2004
Sheet 1 of 1