OPERATIONAL NOTES:

P2.5 HIGH = WING UP
P2.6 HIGH = WING DOWN

BOARD LAYOUT NOTES:

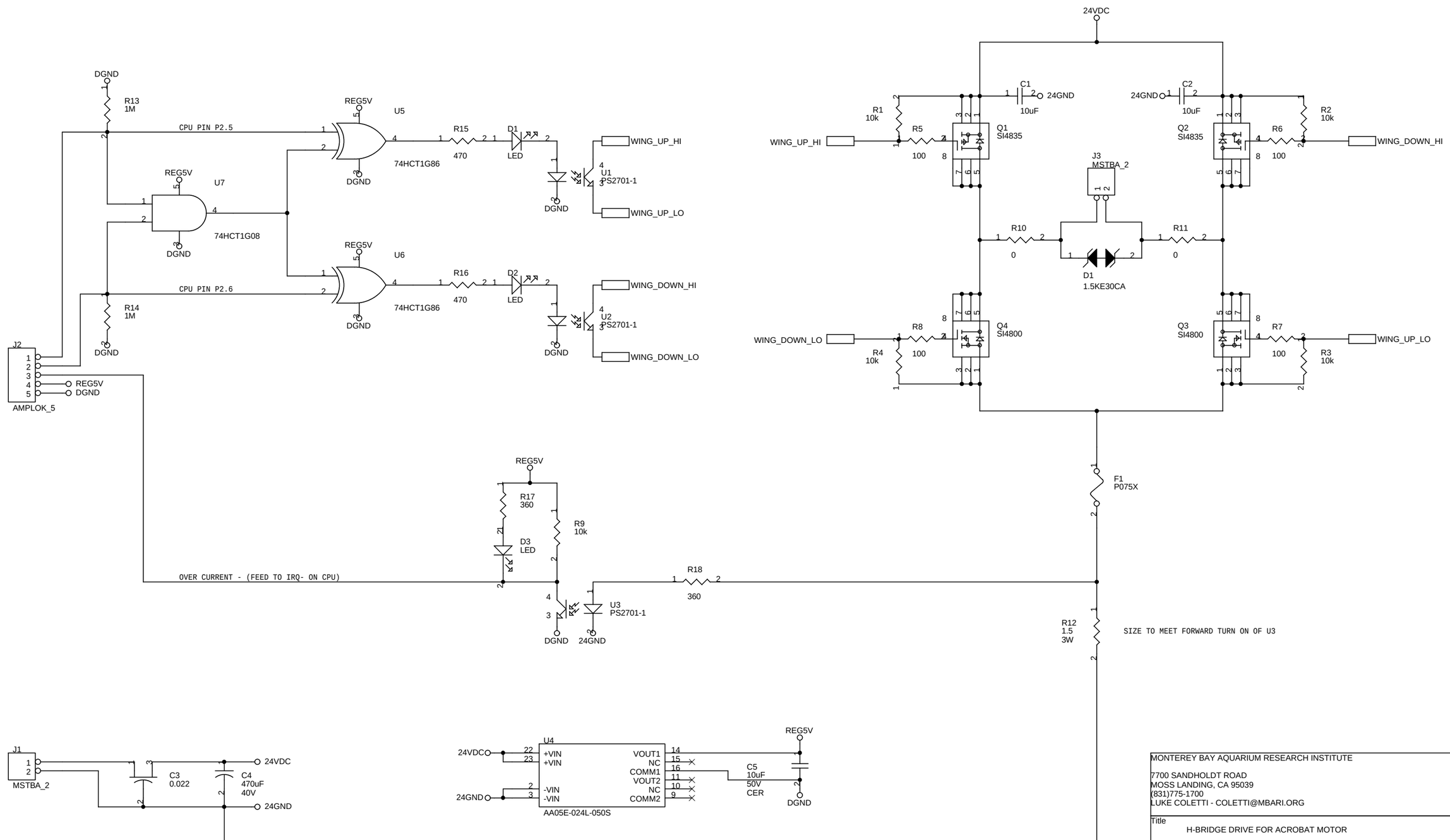

MONTEREY BAY AQUARIUM RESEARCH INSTITUTE

7700 SANDHOLDT ROAD
MOSS LANDING, CA 95039
(831)775-1700
LUKE COLETTI - COLETTI@MBARI.ORG

Title: H-BRIDGE DRIVE FOR ACROBAT MOTOR

Size	Document Number	Rev
B	1001757-SCH	B

Date: Wednesday, June 25, 2003 Sheet 1 of 1