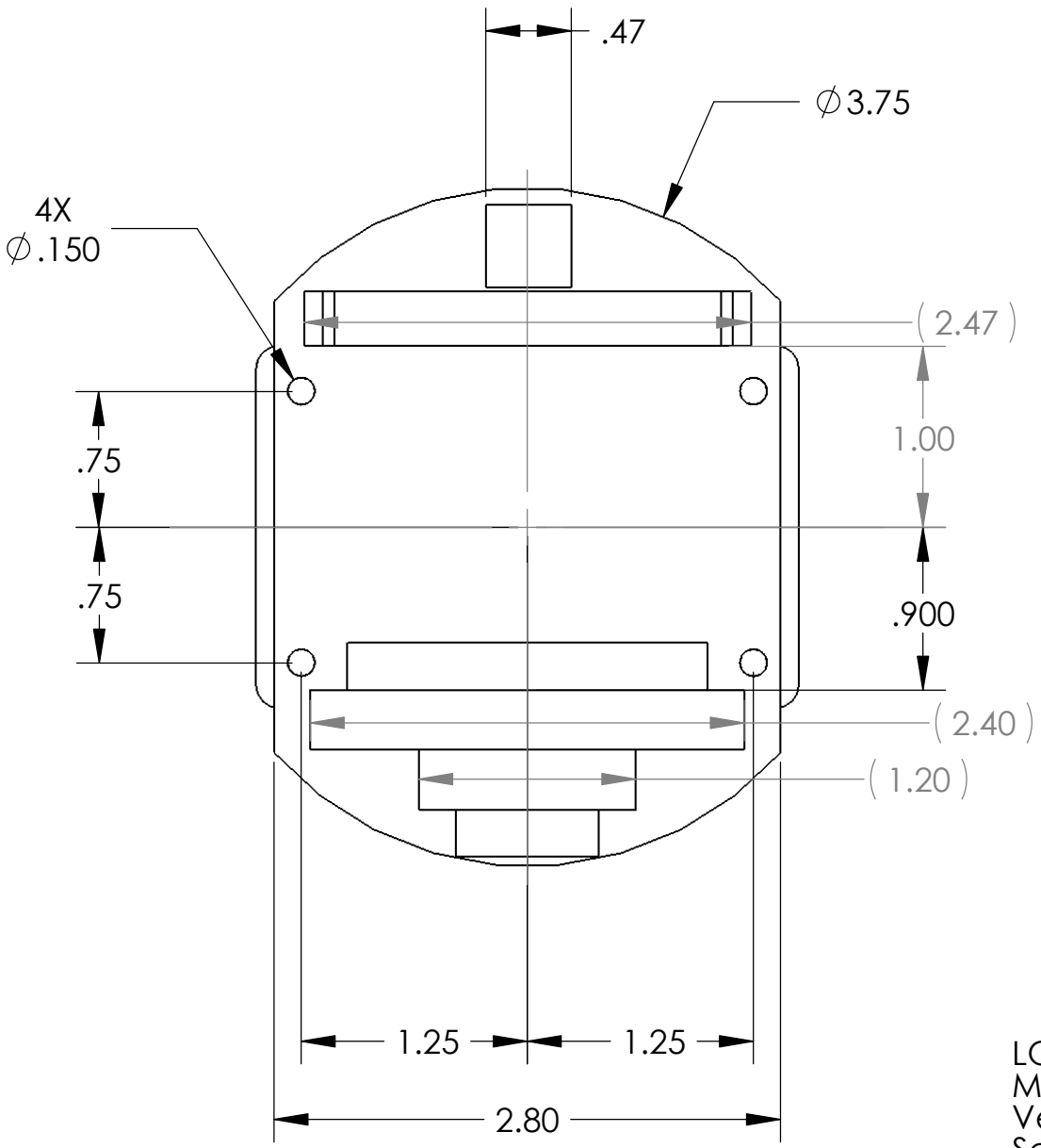

LOBO Breakout PCB
MBARI
Version 1.1 : 4/14/04
Scale 1:1