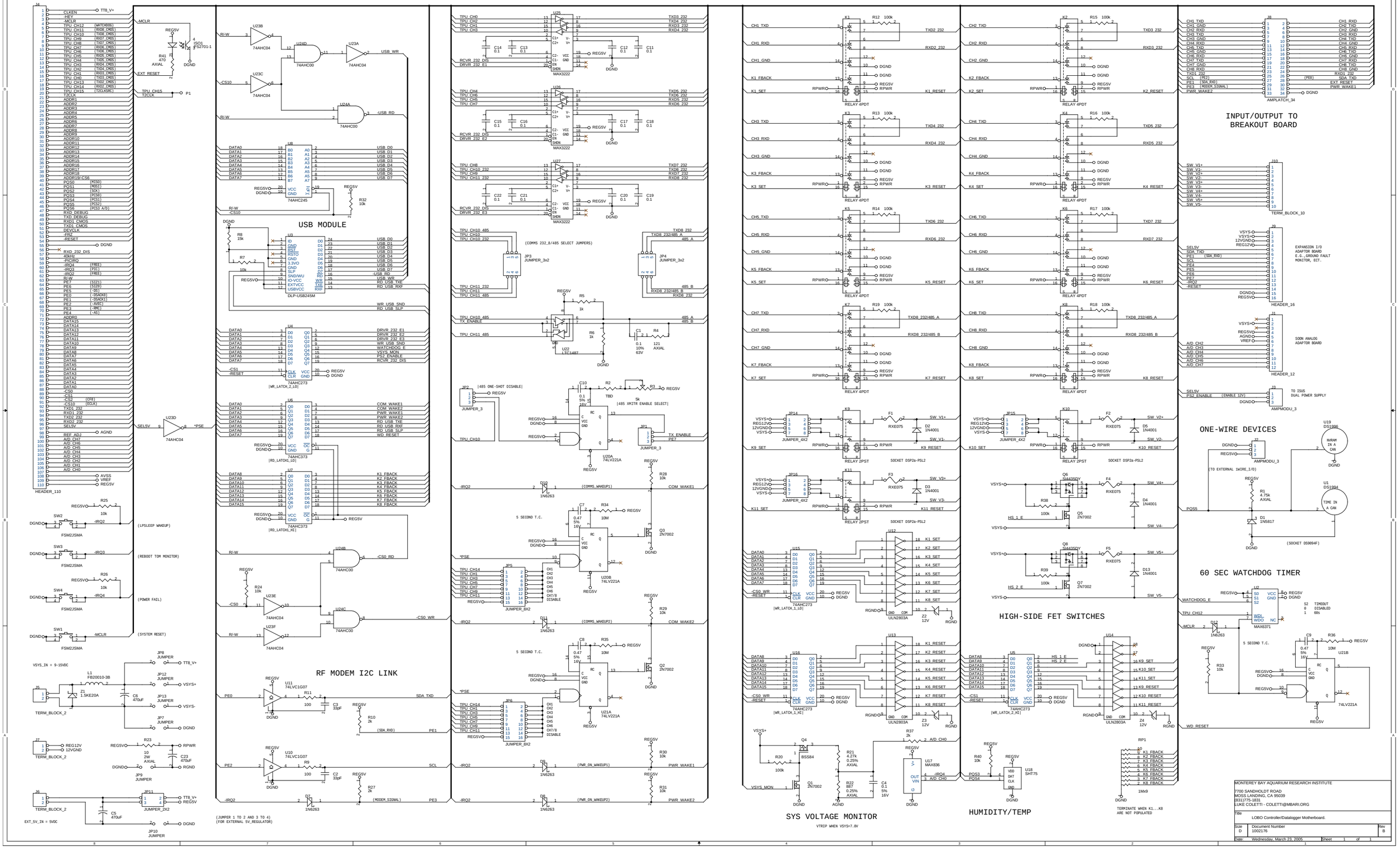
INPUT/OUTPUT TO BREAKOUT BOARD
USB MODULE
RF MODEM I2C LINK
ONE-WIRE DEVICES
60 SEC WATCHDOG TIMER
HIGH-SIDE FET SWITCHES
SYS VOLTAGE MONITOR
HUMIDITY/TEMP
HEADER_110
AMPLATCH_34
TERM_BLOCK_10
HEADER_16
HEADER_12
AMPMODU_3
MAX3222
RELAY 4PDT
RELAY 2PST
SOCKET DSP2a-PSL2
MAX6371
ULN2803A
MONTEREY BAY AQUARIUM RESEARCH INSTITUTE
7700 SANDHOLDT ROAD
MOSS LANDING, CA 95039
(831)775-1831
LUKE COLETTI - COLETTI@MBARI.ORG
LOBO Controller/Datalogger Motherboard.
Document Number 10021176
Wednesday, March 23, 2005