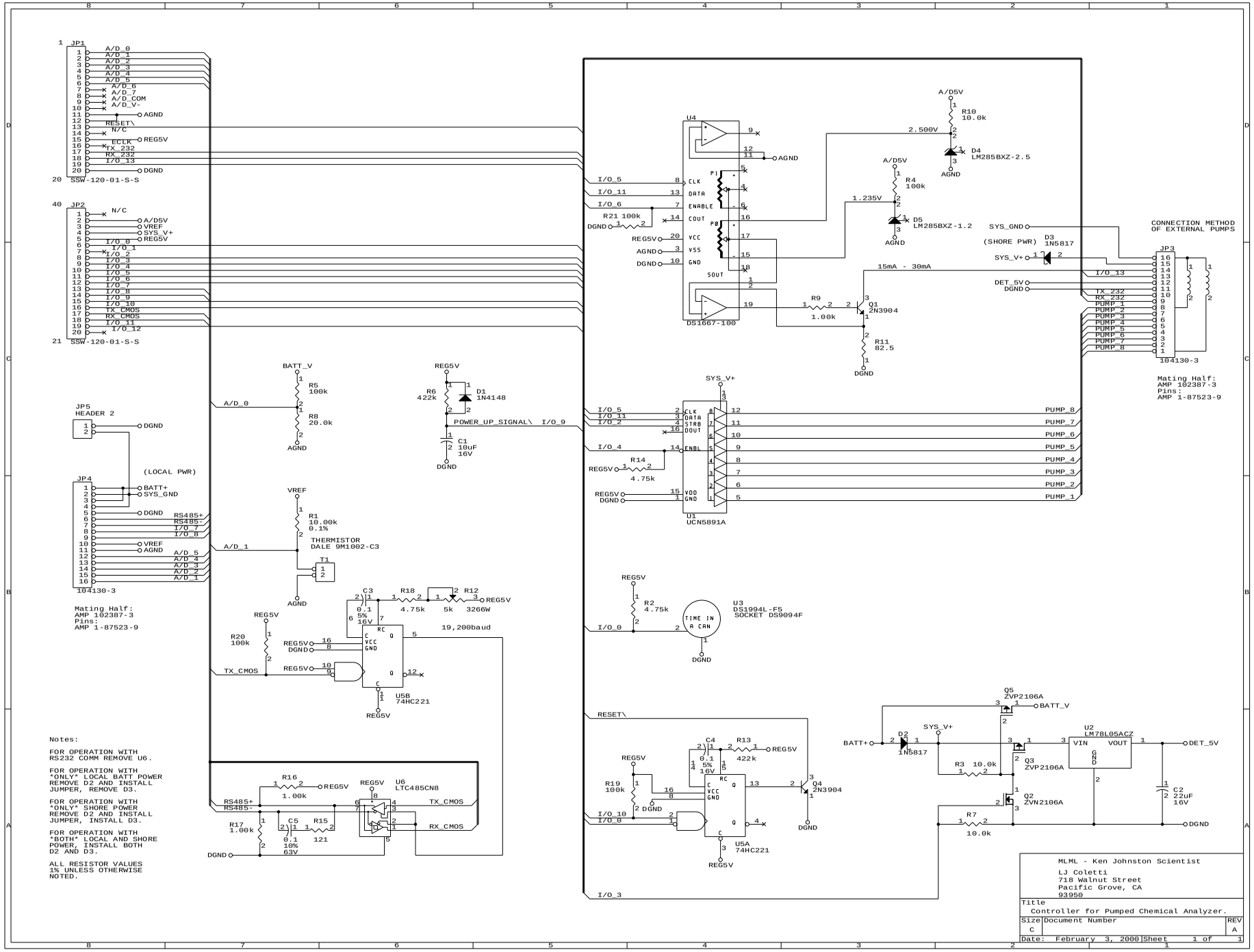
JP1
SSW-120-01-S-S
JP2
SSW-120-01-S-S
JP5
HEADER 2
JP4
104130-3
Mating Half:
AMP 102387-3
Pins:
AMP 1-87523-9
(LOCAL PWR)
U4
DS1667-100
U1
UCN5891A
JP3
104130-3
CONNECTION METHOD
OF EXTERNAL PUMPS
Mating Half:
AMP 102387-3
Pins:
AMP 1-87523-9
THERMISTOR
DALE 9M1002-C3
19,200baud
U5B
74HC221
U6
LTC485CN8
U3
DS1994L-F5
SOCKET DS9094F
U5A
74HC221
U2
LM78L05ACZ
Notes:
FOR OPERATION WITH
RS232 COMM REMOVE U6.
FOR OPERATION WITH
ONLY LOCAL BATT POWER
REMOVE D2 AND INSTALL
JUMPER, REMOVE D3.
FOR OPERATION WITH
ONLY SHORE POWER
REMOVE D2 AND INSTALL
JUMPER, INSTALL D3.
FOR OPERATION WITH
BOTH LOCAL AND SHORE
POWER INSTALL BOTH
D2 AND D3.
ALL RESISTOR VALUES
1% UNLESS OTHERWISE
NOTED.
MLML - Ken Johnston Scientist
LJ Coletti
718 Walnut Street
Pacific Grove, CA
93950
Title
Controller for Pumped Chemical Analyzer.
Size C
Document Number
REV A
Date: February 3, 2000
Sheet 1 of 1