THE INFORMATION CONTAINED IN THIS DRAWING IS THE SOLE PROPERTY OF MBARI ANY REPRODUCTION IN PART OR WHOLE WITHOUT THE WRITTEN PERMISSION OF MBARI IS PROHIBITED

REVISIONS			
REV.	DESCRIPTION	DATE	APPROVED
	INITIAL RELEASE		

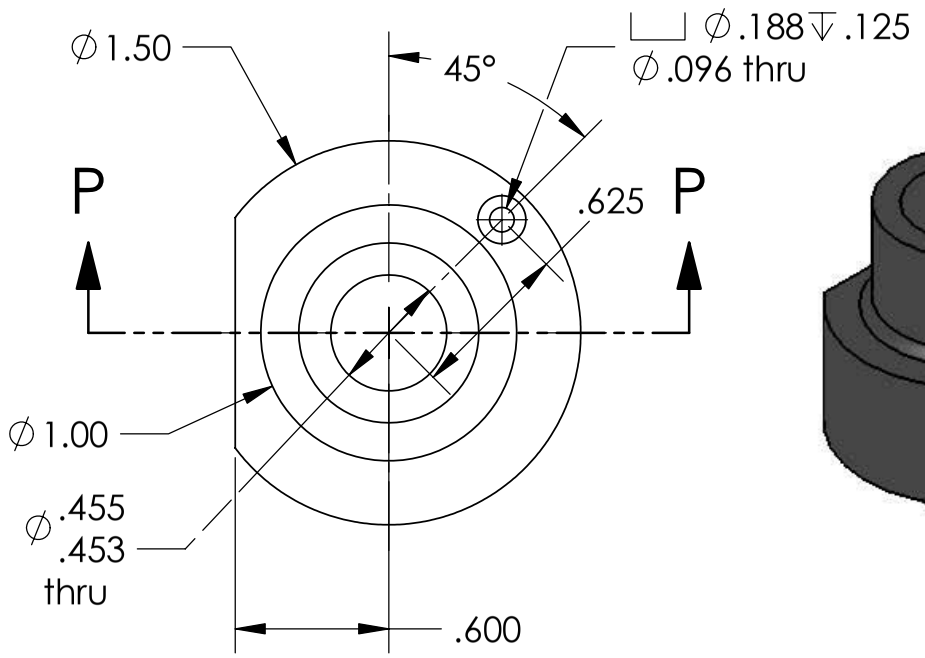

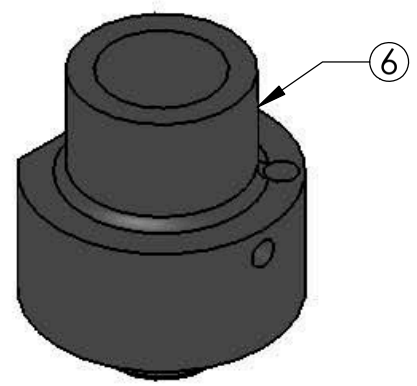

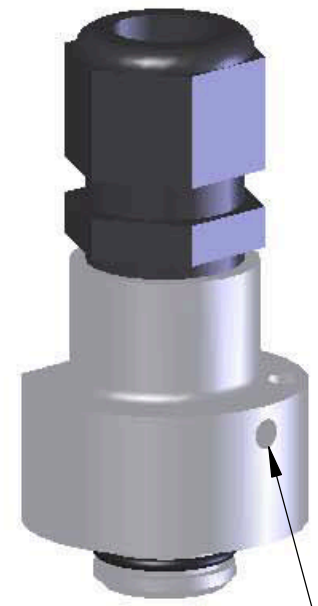

Assembly

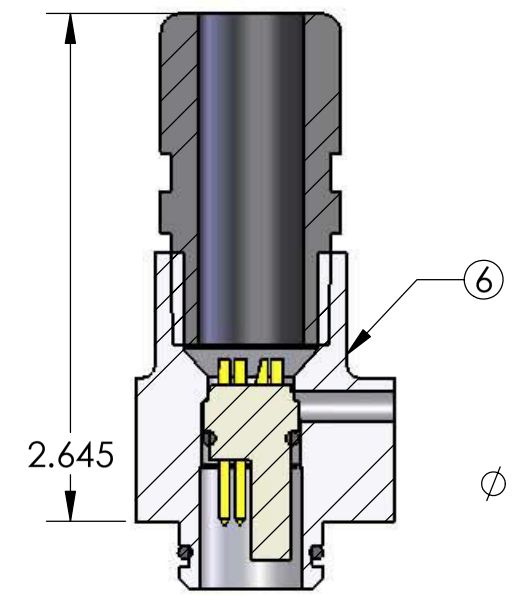

Assembled Section

Potting compound injection port

This part shown for dimensions only

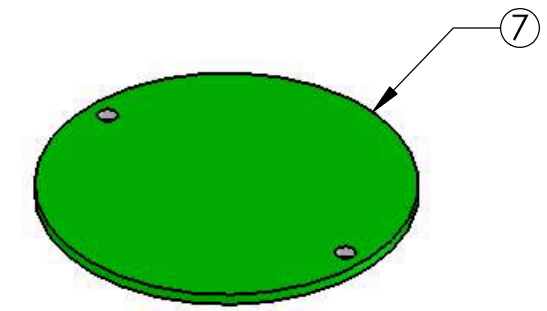

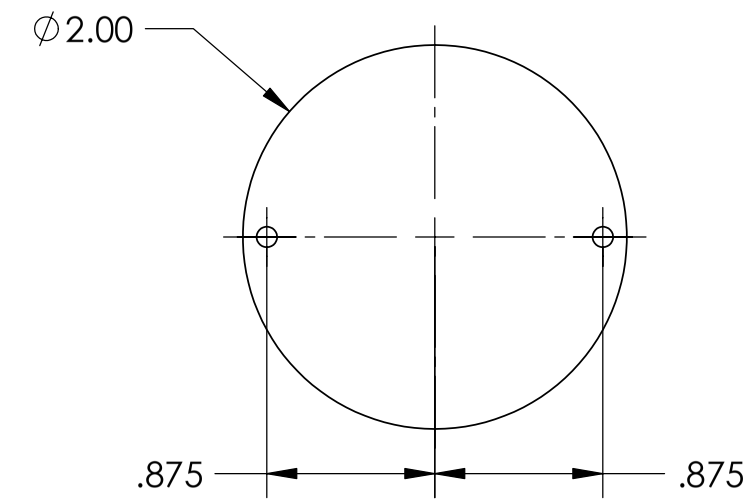

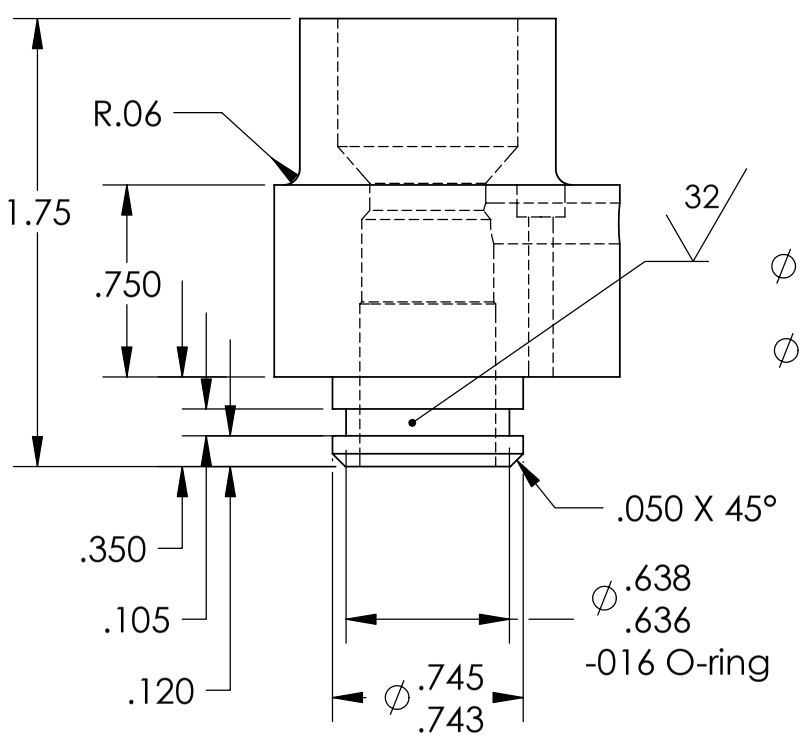

NOTE: These O-ring dimensions non-standard (per YSI)

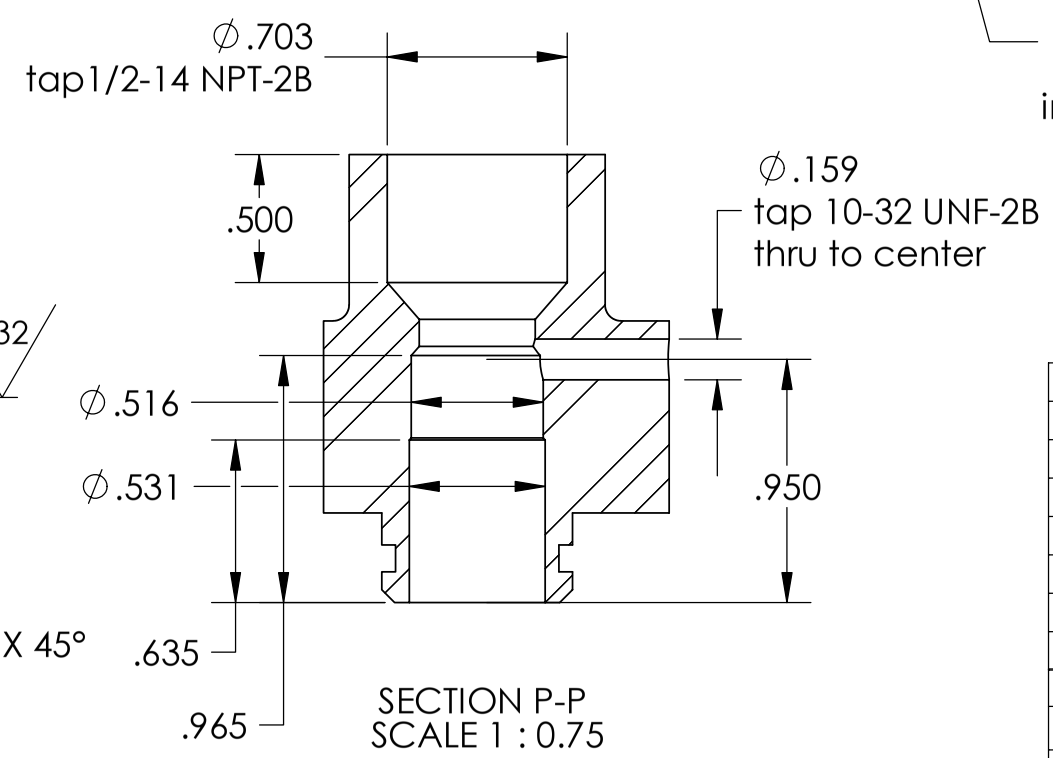

SECTION P-P
SCALE 1 : 0.75

Item No.	Qty.	Part No.	Description	Material Specification
7	1@		PCB	Shown for dimensions only
6	1@		Connector housing	Black Delrin
5	1@		Housing	Hard anodized 6061 aluminum
4	1@		Endcap-Bottom	Black Delrin
3	1@		Endcap-Top	Black Delrin
2	1@		Maze (Config A, B and C)	Black Delrin
1	1@		Flowcell (Config A and B)	Clear Acrylic

BILL OF MATERIALS

Shop / Q.C.	
Inspector	
Shop Foreman	
Engineer	
NEXT ASSY Description	NEXT ASSY Number
Application	

UNLESS OTHERWISE SPECIFIED TOLERANCES ARE:

1 PLACE DIM ±1/16	2 PLACE DIM ±.02	3 PLACE DIM ±.005	ANGLES ±1°

1. DIMENSIONS ARE IN INCHES
2. DIMENSION LIMITS HELD AFTER PLATING.
3. REMOVE BURRS AND SHARP EDGES .015 MAX.
4. MACHINED FILLET RADII .0150-.030.
5. MACHINED DIAMETERS ON A COMMON CENTERLINE CONCENTRIC WITHIN .005
6. PERPENDICULARITY & PARALLELISM OF MACHINED SURFACES .002 PER INCH, MAX .012 INCHES FOR SINGLE SURFACE.

DO NOT SCALE DRAWING

APPROVALS	DATE
DRAWN Haris Jannasch	9/15/04
ENGINEER	
CHECKED JE	10/12/04
PROJECT NO. 708144	
PROJECT Zanna's NSF Grant	
WEIGHT	

Monterey Bay Aquarium Research Institute
MBARI
7700 Sandholdt RD.
Moss Landing, CA 95039
PH: (831) 775-1700

165jahaPMTflowcell

PMT Flowcell for DigiSCAN

SIZE B | DWG. NO. 165jaha.DWG | REV.

SCALE 1:1 | CAD FILE: tornado/chem/SWfiles | SHEET 6 OF 6