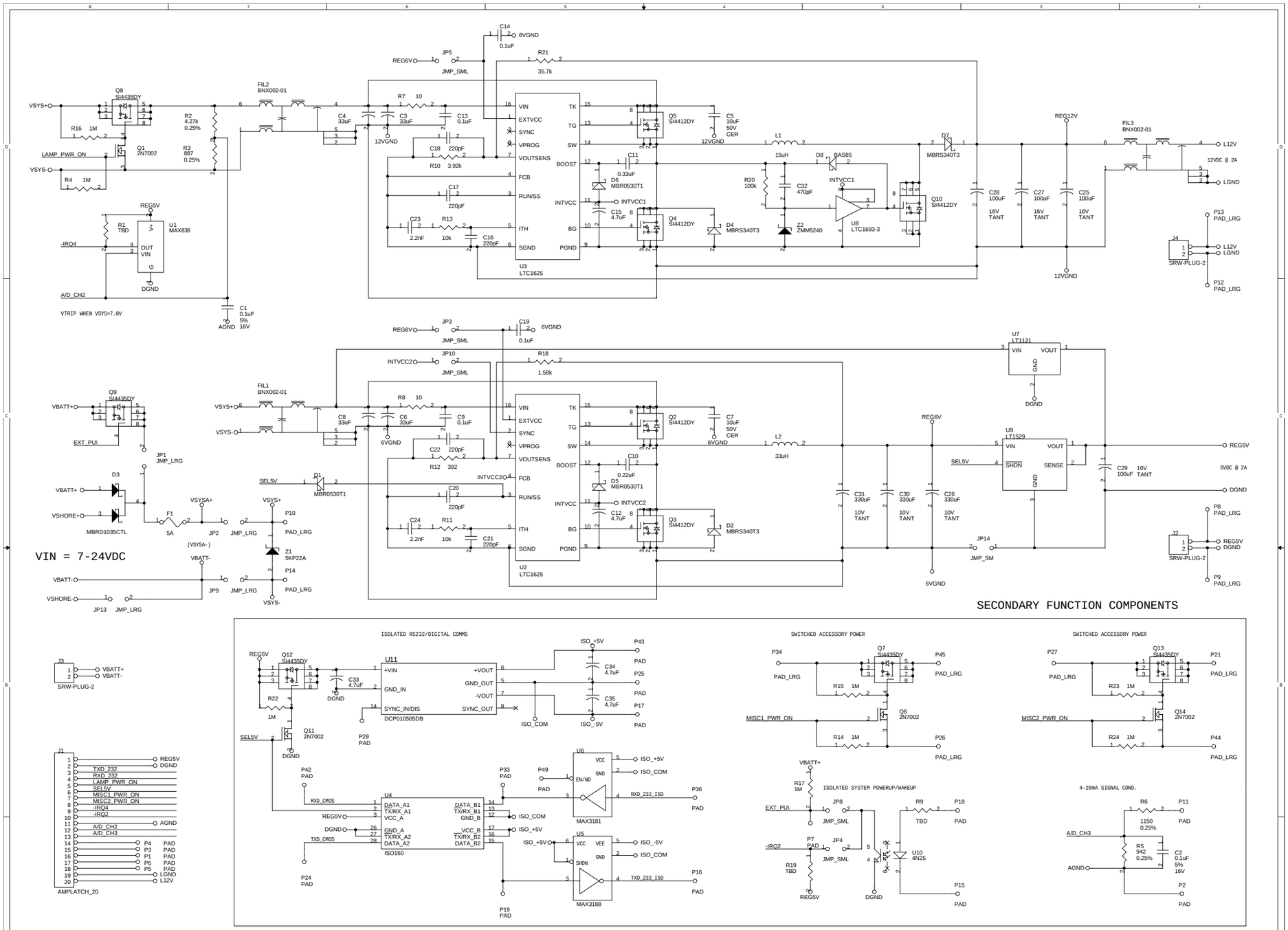

Monterey Bay Aquarium Research Institute

Luke Coletti - coletti@mbari.org
7700 Sandholdt Road
Moss Landing, CA 95039
(831)775-1831

Title	ISUS Power Supply Board.	
Size C	Document Number 101294-SCH	Rev A
Date: Thursday, May 02, 2002	Sheet 1 of 1	